1633 Staunton Ave
Los Angeles, CA 90021
TEL. (800) 727-9262 (213) 747-4500
FAX. (800) 727-9957 (213) 747-3234
E-Mail: sales@coronalighting.com

CORONA Lighting
WWW.CORONALIGHTING.COM

ARCHITECTURAL GRADE SERIES

SPECIFICATION SHEET

PRODUCT # : CL-803-D-BK

•Flexible BBQ- Deck Light •Aluminum & Steel

Fixture Specifications:

Head: Diecast aluminum

Arm: Flexible steel black polyolefin shrink wrap arm
Available in 12", 24", and 36" lengths

Finish: Polyester UV powder coated, **BK**- Black

Lens: None

Socket: Top grade bi-pin socket

Lamp: 12V, MR-16 LED
Available in 5W Bluetooth mesh smart RGB-WW;
3.5W, 5W, 6W LED or without lamp.
See lamp guide, below for more information.

Mounting: 3" round aluminum base canopy with on/off push button covered by rubber boot

Wiring: Fixture is prewired with a 3ft direct burial cable. Wire connector sold separately.
Quick-locking connectors **(CX-LOC)** are available from Corona Lighting, see page 2 for details.

Electrical Notes: A remote 12V transformer is required. Find available options on page 2 Voltage range for BT/LED lamps are 9V-17V. Some assembly needed. Proper grease/lubricant is suggested on threaded parts during installation.

Warranty: One (1) year warranty on fixture against manufacturer's defects.

CL-803-D-BK-36 is shown

LED
3.5W, 5W & 6W

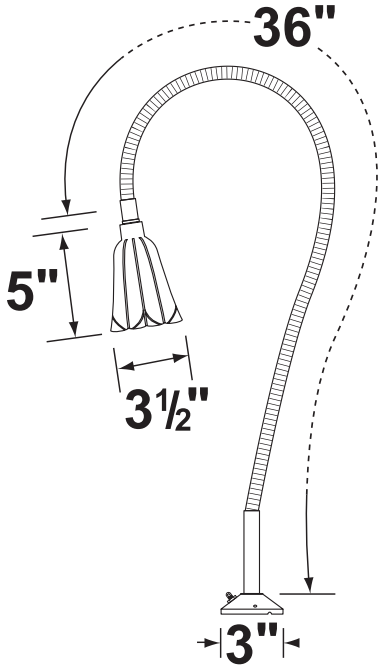

AVAILABLE LED LAMPS

*(Corona LED lamps have a **five (5)** year limited warranty against manufacturer's defects)*

LAMP NUMBER	WATTS	BEAM SPREAD	BEAM LUMEN	COLOR & TEMP.	RATED HOURS	HALOGEN EQUIVALENT
L-ED16-5W-BT	1-5	15° / 38º / 60º	25-530	2200K-5700K	50,000	---
L-ED16-3W / 5W-SP■	3.5 / 5	15° Spot	270 / 350	2700K	50,000	25 / 40 Watt
L-ED16-3W / 5W-FL■	3.5 / 5	45° Flood	270 / 350	2700K	50,000	25 / 40 Watt
L-ED16-3W / 5W-WF■	3.5 / 5	60° Wide Flood	270 / 350	2700K	50,000	25 / 40 Watt
L-ED16-COB5W-SP / 3K	5	15° Spot	450 / 470	2700K / 3000K	50,000	50 Watt
L-ED16-COB5W-FL / 3K	5	38° Flood	450 / 470	2700K / 3000K	50,000	50 Watt
L-ED16-COB5W-WF / 3K	5	60° Wide Flood	450 / 470	2700K / 3000K	50,000	50 Watt
L-ED16-6W-SP / 3K	6	15° Spot	600	2700K / 3000K	50,000	75 Watt
L-ED16-6W-FL / 3K	6	38° Flood	600	2700K / 3000K	50,000	75 Watt
L-ED16-6W-WF / 3K	6	60° Wide Flood	600	2700K / 3000K	50,000	75 Watt

■ *5W Single color MR-16 LED available in AMBER, BLUE, GREEN, PURPLE, RED and VIOLET*

JOB INFORMATION

TYPE: DATE:

JOB NAME & ADDRESS:

PRODUCT #:

TOTAL QUANTITY:

LAMP TYPE & WATTAGE:

TRANSFORMER:

CONTRACTOR:

SPECIFIER:

- When ordering LED lamp with a fixture your part number should follow the format below:

•*CL* - product # - Length - lamp - wattage - lamp angle

CL - 803-D-BK - 36 - L-ED16 - 5W - FL

Example: CL-803-D-BK-36-L-ED16-5W-FL

- Corona Lighting reserves the right to make any change and/or improvement to the design and construction of this fixure without further notification.

1633 Staunton Ave
Los Angeles, CA 90021
TEL. (800) 727-9262 (213) 747-4500
FAX. (800) 727-9957 (213) 747-3234
E-Mail: sales@coronalighting.com

WWW.CORONALIGHTING.COM

ARCHITECTURAL GRADE SERIES

ACCESSORIES SHEET

PRODUCT # : CL-803-D-BK

•Flexible BBQ- Deck Light

• Aluminum & Steel

Stainless Steel Pool and Spa Rated Transformers

T-LTF60	60W, 12V, Compact Mini Transformer
T-LT75	75W, 12 and 15V, Single Circuit Transformer w/ Integrated Mechanical Timer.
T-LT150	150W, 12-15V, Single Circuit Transformer.
T-LT300	300W, 12-15V, Single Circuit Transformer.
T-LT600	600W, 12-15V, Dual Circuit Transformer.
T-LT900	900W, 12-22V, Triple Circuit Transformer.
T-FIDT	Field Installed Plug-in Digital Timer.
T-FIT	Field Installed Plug-in Mechanical Timer.
T-TR-FIP	Field Installed Plug-in Photocell

T-LT75

T-LT150

T-FIDT

T-TR-FIP

T-LT300

Special Lenses & Honeycomb Louvers

CX-238	MR-16 Snap-on holder, **Silver Plated**
CX-239	MR-16 honeycomb louver, **Black**
CX-240-AM	MR-16 color lens, **Amber**
CX-240-BL	MR-16 color lens, **Blue**
CX-240-GR	MR-16 color lens, **Green**
CX-240-RD	MR-16 color lens, **Red**
CX-240-YL	MR-16 color lens, **Yellow**
CX-241	MR-16 lens, **Linear Spread**
CX-242	MR-16 lens, **Frosted**
CX-243	MR-16 lens, **Prismatic**

• *For MR-16 Lenses and Louvers, you will need the CX-238*

Cable Connectors

CX-LOC Quick-locking Cable Connectors, **Tan**
(Installation Instructions)

CX-LOC

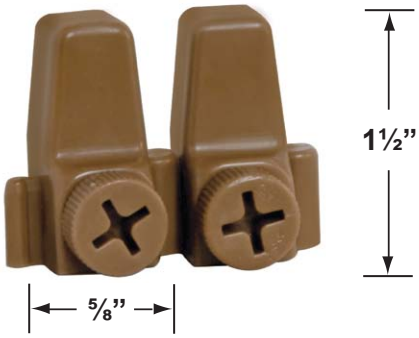

• Corona Lighting reserves the right to make any change and/or improvement to the design and construction of this fixure without further notification.